Accelerator

Exceptional Value and a Choice of Sizes and Features

- **Two firebox opening sizes (36" and 42")** give more options and price selections
- Choice of **heat circulating or radiant versions**
- Substantial firebox depth (19-3/4") provides **greater visual hearth area**
- The circulating design allows the addition of a **broad range of optional trim and performance accessories**
- **Full-textured refractory lining** in choice of herringbone or traditional pattern, finished in a dusky rose color
- A hearth extension is required
- SL300 Series venting
- Tested and listed to **UL safety standards**
- Covered by Heatilator Warranty**

Options*

DM Doors

Herringbone

Traditional

Fireside Gas Logs

Product Dimensions

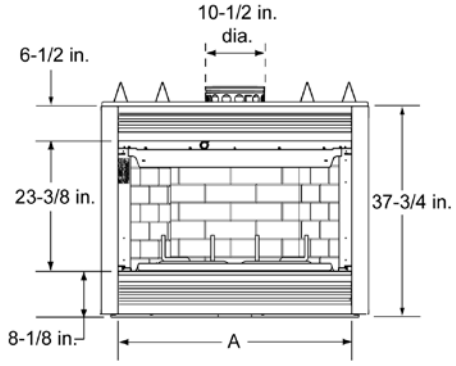

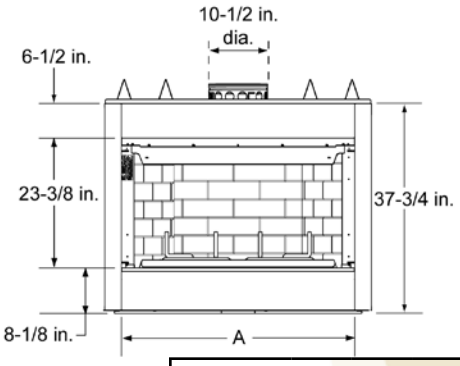

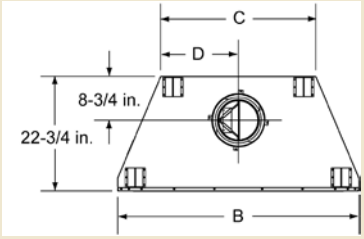

PRODUCT DIMENSIONS				
	A	B	C	D
A36R/C	36"	42"	28-1/4"	14-1/8"
A42R/C	42"	48"	30-7/8"	15-1/2"

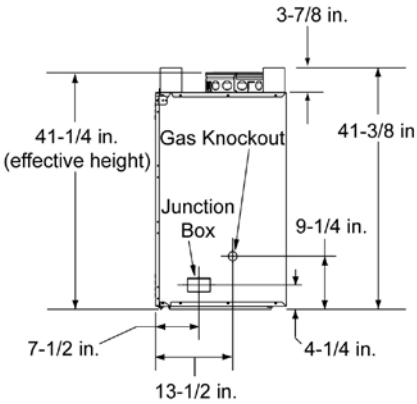

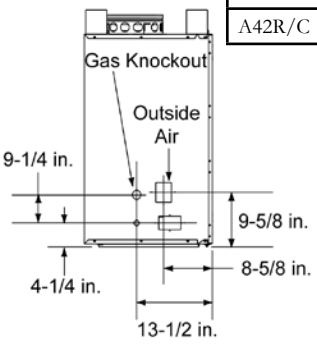

Framing Dimensions

FRAMING DIMENSIONS	
	A
A36R/C	43"
A42R/C	49"

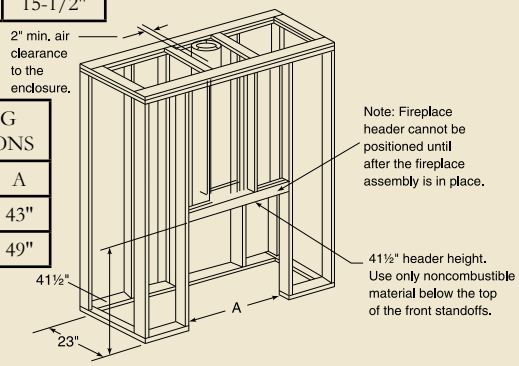

AVAILABLE FROM

heatilator®

The first name in fireplaces

a brand of Hearth & Home Technologies Inc.

1915 West Saunders Street • Mt. Pleasant, Iowa 52641

800-927-6841 • heatilator.com

The information provided in this literature is for planning purposes only and subject to change. Please consult the installation manual for actual installation.

*Please consult the MSRP book for a complete list of optional accessories. Circulating photo on cover shown with traditional refractory, Phillips Hall mantel and custom marble. Radiant photo on cover shown with DM doors, Mt. Vernon mantel and custom marble.

**For full warranty details go to www.heatilator.com

HTL-1022U-1108

Accelerator

Woodburning Fireplace

heatilator®

The first name in fireplaces